
1
2
3
4
5
6
7
8
9
*
0
#
CARD


智能终端

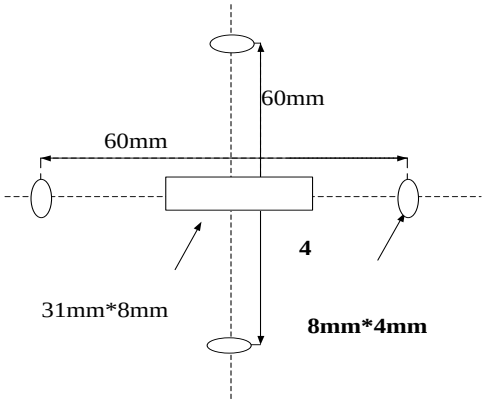
60mm
60mm
4
31mm*8mm
8mm*4mm



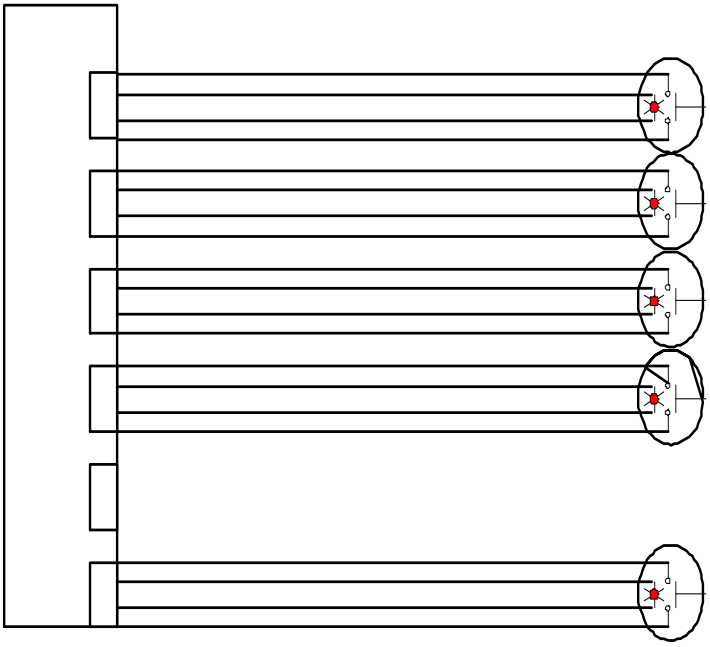

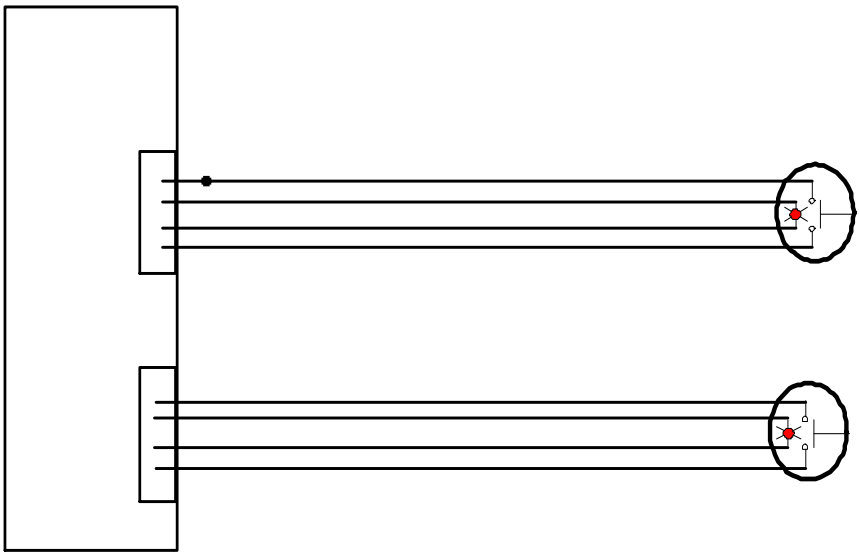

3 4

IC 4

4 #